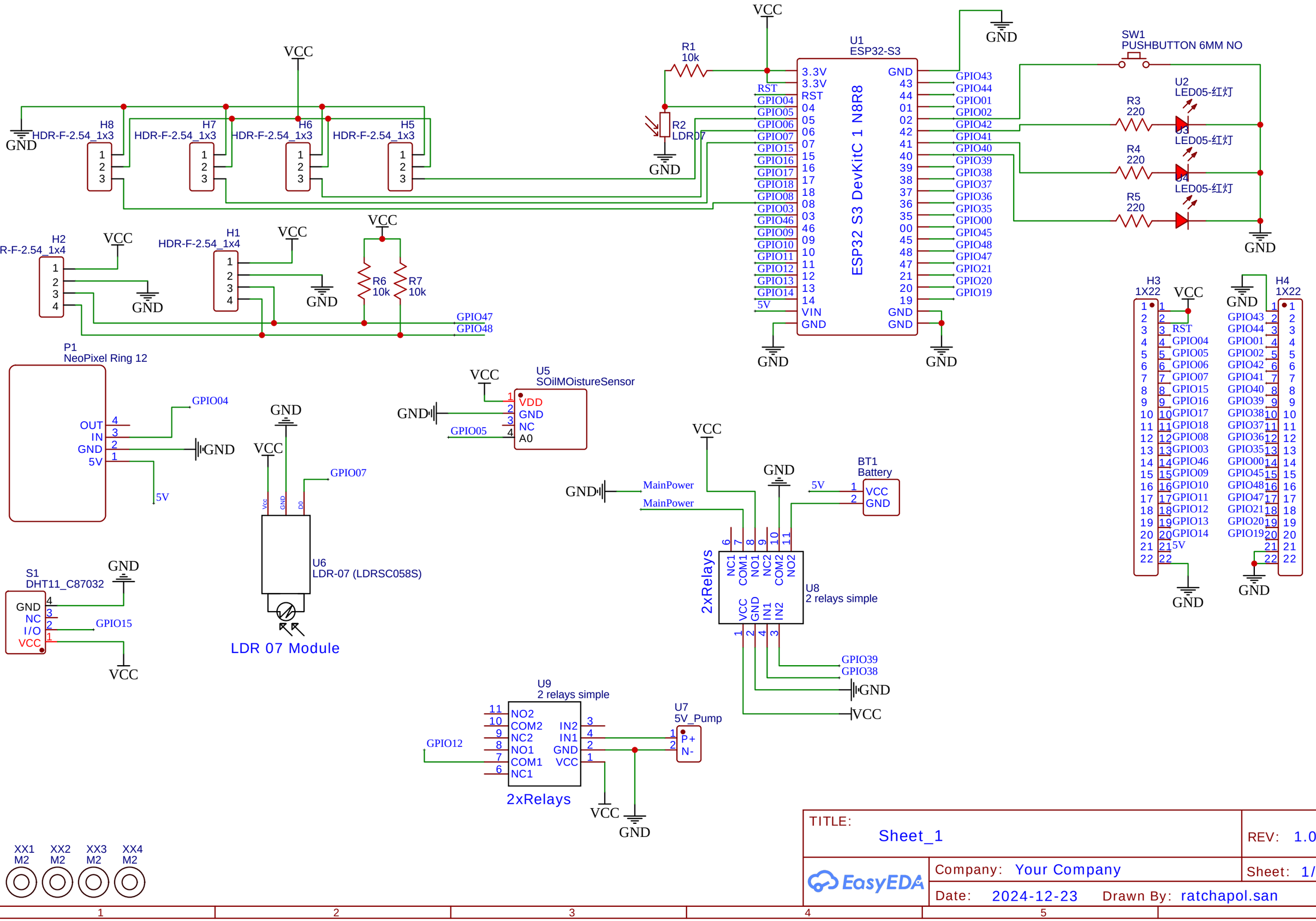
VCC
GND
R1
10k
R2
LDR07
U1
ESP32-S3
ESP32 S3 DevKitC 1 N8R8
3.3V
3.3V
RST
GPIO04
GPIO05
GPIO06
GPIO07
GPIO15
GPIO16
GPIO17
GPIO18
GPIO08
GPIO03
GPIO46
GPIO09
GPIO10
GPIO11
GPIO12
GPIO13
GPIO14
5V
VIN
GND
GPIO43
GPIO44
GPIO01
GPIO02
GPIO42
GPIO41
GPIO40
GPIO39
GPIO38
GPIO37
GPIO36
GPIO35
GPIO00
GPIO45
GPIO48
GPIO47
GPIO21
GPIO20
GPIO19
SW1
PUSHBUTTON 6MM NO
U2
LED05-红灯
U3
LED05-红灯
U4
LED05-红灯
R3
220
R4
220
R5
220
H8
HDR-F-2.54_1x3
H7
HDR-F-2.54_1x3
H6
HDR-F-2.54_1x3
H5
HDR-F-2.54_1x3
H2
HDR-F-2.54_1x4
H1
HDR-F-2.54_1x4
R6
10k
R7
10k
GPIO47
GPIO48
H3
1X22
H4
1X22
P1
NeoPixel Ring 12
OUT
IN
GND
5V
GPIO04
U5
SOilMOistureSensor
VDD
GND
NC
A0
GPIO05
GPIO07
U6
LDR-07 (LDRSC058S)
LDR 07 Module
S1
DHT11_C87032
GND
NC
I/O
VCC
GPIO15
MainPower
BT1
Battery
U8
2 relays simple
2xRelays
NC1
COM1
NO1
NC2
COM2
NO2
VCC
GND
IN1
IN2
GPIO39
GPIO38
U9
2 relays simple
2xRelays
NO2
COM2
NC2
NO1
COM1
NC1
IN2
IN1
GND
VCC
GPIO12
U7
5V_Pump
P+
N-
XX1
M2
XX2
M2
XX3
M2
XX4
M2
TITLE:
Sheet_1
REV: 1.0
Company: Your Company
Sheet: 1/1
Date: 2024-12-23
Drawn By: ratchapol.san
EasyEDA